Hitzeschutz // Arbeitsschutz // Isoliertechnik // Laserschutz
Heat Protection // Work Protection // Insulation Technology // Laser Protection
MADE IN GERMANY.

JUTEC

PROTECTION WHERE THINGS GET HOT.

PROFESSIONAL ACCESSORY

www.jutec.com

Splash Protection Blankets // Welding Protection Curtains // Heat Protection Fabric

Your partner for safety!

As an owner-operated family business, JUTEC® GMBH has stood for safety and quality for more than 30 years. Our customers benefit from this experience worldwide. We react flexibly and quickly to new challenges. Approximately 100 employees stand for expertise and know-how. Our new company headquarters just outside Oldenburg offers the most modern working conditions and production processes. The segments heat protection, work protection, insulation technology and laser protection are produced here in a 5,000 sqm production building.

We safeguard these processes with a quality management system according to DIN EN ISO 9001:2015 as well as those for production as per Module D of the PPE Directive (EU) 2016/425 (formerly Article 11B of the Directive 89/686/EEC) and Module D of the Directive 2014/90/EU for maritime equipment.

Visit the new JUTEC® GMBH, we're looking forward to your visit.

ZERTIFIKAT

DGUV Test

CERTIFICATE

Quality System

DGUV Test

MADE IN GERMANY.

Contents.

Certified heat protection	Page 04
Heat protection fabric	Page 05
Splash protection blankets	Page 08
Welding protection curtains	Page 09
Insulating mats/foundry mats	Page 10
Pipe construction mats	Page 11
Protective covers	Page 12
Welding pillows	Page 13
Dry/wet mats	Page 14
Even more heat protection	Page 15
Flame protection paste	
Heat protection cases	
Extinguishing blankets	
Welder's gloves	Page 16
Full equipment protection	Page 17
Welder's aprons	
Dimension sheets	Page 18

Propagation behavior of welding spatter during welding work.

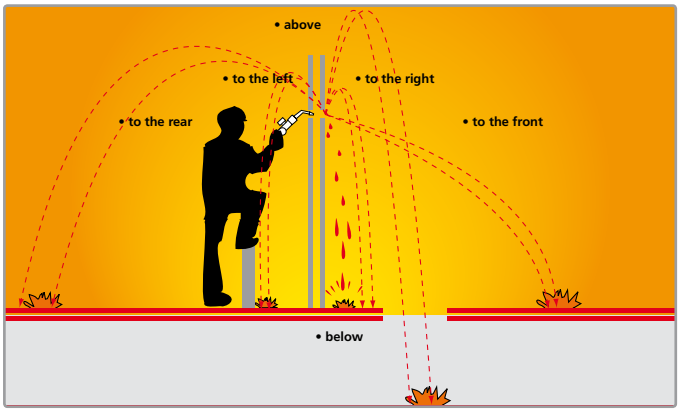

Direction of splashing of welding spatter

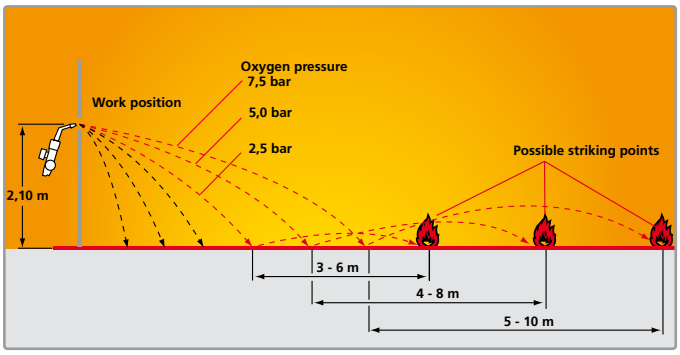

Splashing distance of welding spatter - horizontal range

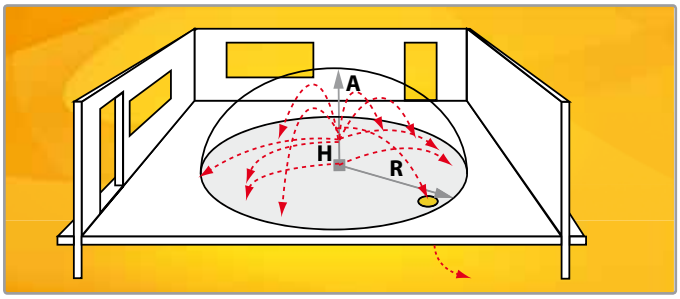

At working heights above 2 m, the lateral radius (R) of all work processes must be increased by 0.5 m per additional meter of working height (H) and secured!

Source: German federal law - Arbeitsicherheit durch vorbeugenden Brandschutz (BG - Occupational Safety through Preventative Fire Protection), Edition 1995, Pg.20

Certified fabric.

*Quality comes first for all JUTEC® products. With the **ISO 9001:2015** certification we commit ourselves to a high level of quality management and responsible handling of technical and safety-related data. These data are accessible to our customers at all times. With state-of-the-art CAD, Cut technology and computerized sewing technology, we can offer our customers extremely fast, customized solutions.*

We can provide you with a technical data sheet for each product. The information on temperature resistance for short-term and continuous loading and/or the type of thermal loading (radiated heat or contact heat) is of elementary importance.
In addition, you also receive EC safety data sheets and corresponding certificates from JUTEC®.

Certificates

*The reputable Materialprüfungsinstitut (MPA - Materials Testing Institute) in Dresden, Germany, subjected JUTEC® fabric to a test in accordance with **DIN EN 13501-1** (Fire behavior of building materials and structural elements) in accordance with the new **European Fire Protection Test applicable for all European countries**.*

European fire protection test
DIN EN 13501-1
Fire behaviour: A1 | A2 | B
Smoke production: s1 | s2
Burning droplets: d0

Comparison of DIN 4102 and EN 13501
for non-flammable or flame retardant heat protection fabrics
In Germany the older, but for the time being valid standard B1 according to DIN 4102 for flame retardant fabrics is still prevalent. The newer and safer EN 13501 classification system which has also applied since 2002 even governs this throughout Europe. Both standards provide proof of the flame retardancy of a product. The standard EN 13501 also shows additional fire side effects, such as smoke development or the burning falling or dripping off of certain materials.

*The fabric was also tested by the Brandversuchshaus (Fire Test Laboratory) of TÜV-Nord and certified by the **German See-Berufsgenossenschaft (SEE-BG - Maritime Employers' Liability Insurance Association).***
*In addition, the approval of the **U.S. Coast Guard for the worldwide shipbuilding standard** has also been issued for our fabric.*

0736

Fabric structures.

High-temperature fibers.

High-temperature textiles enable flexible product design and offer protection against high thermal loading of human beings, machines and materials. By using inorganic fibers which have a higher thermal resistance compared to organic fibers and are non-flammable, JUTEC® mainly works with fabrics produced from yarns of two fiber types:

E-glass thread

is resistant to oil, grease, organic acids, solvents, water (hydrolytic Class 1 according to DIN 12111) and media with pHs of 3 to 9. In addition, E-glass fabrics are toxicologically harmless and are not subject to marking according to the German Gefahr-Stoff-Verordnung (GefStoffV - Hazardous Substance Regulation). The melting point of the loom-finished fabrics is between 840°C and 1,000°C.

Silicate thread

Silicate thread is chemically resistant with the exception of hydrofluoric and phosphoric acid and strong alkaline solutions. This type of thread is extremely skin-friendly and toxicologically harmless. The labeling requirement in accordance with the German GefStoffV does not apply to silicate thread. The ideal protection against molten metal splashes and glowing slag can be explained from the high melting temperature of 1,600°C to 1,700°C.

Smooth thread and textured thread

JUTEC® fabrics are woven from both smooth and textured thread. Smooth thread has a higher strength at the same weight, while textured threads are characterized by greater volume and therefore an improved insulating effect, as greater quantities of air are stored in the textured thread.

Smooth thread *Textured thread*

Fabric of smooth thread

Fabric of textured thread

Weaves

Fabrics with an extremely broad range of weaves are manufactured from the E-glass thread (smooth and/or textured) .

Satin weave

Plain weave

Cross twill weave

The satin weave has the maximum possible thread density. This enables the highest fabric strengths to be reached. The surface is closed and smooth. The fabrics are excellently suited for coatings.

They are characterized by insensitivity to warping and minimal fraying. They have a closed surface. This uniform surface finish enables coatings with low application quantities.

The cross twill weave also has an increased thread density. The characteristic surface structure causes air to be stored.
This results in a good insulating effect with outstanding strength and dimensional stability.

E-glass fabric with Alufix

- slip-resistant
- Can be permanently loaded up to 550°C, briefly up to 600°C
- Material thicknesses from 0.2 mm to 3 mm, standard width 1 m
- Weights from 200 g/m² to 2000 g/m²

up to 600°C CONTACT HEAT!

0736

Art. No.	Weight [g/m²]	Thickness [mm]	Remarks
JT450G1	approx. 450	0.4	E-glass fabric with one-sided Alufix
JT650G1	approx. 650	0.7	E-glass fabric with one-sided Alufix (standard) B - s2, d0 flame retardant
JT650G2	approx. 690	0.7	E-glass fabric with Alufix on both sides
JT1000G1	approx. 1060	1.5	E-glass fabric with one-sided Alufix (standard) B - s2, d0 flame retardant
JT1000G2	approx. 1,120	1.8	E-glass fabric with Alufix on both sides

Additional qualities on request!

E-glass fabric with HT coating

- Mechanically loadable
- Can be permanently loaded up to 750°C, briefly up to 850°C
- Standard width 1 m
- Weights from 600 g/m² to 1070 g/m²

up to 850°C CONTACT HEAT!

0736

Art. No.	Weight [g/m²]	Thickness [mm]	Remarks
JT600HT	approx. 1,070	1.4	E-glass fabric HT-coating - A2 - s1, d0 non-flammable

E-glass fabric, graphitized

Art. No.	Weight [g/m²]	Thickness [mm]	Remarks
JT660HT	approx. 660	0.8	E-glass fabric, graphitized

Additional qualities on request!

E-glass fabric with HT coating

- Mechanically loadable
- Can be permanently loaded up to 900°C, briefly up to 1,150°C
- Standard width 1 m
- Weights from 1,000 g/m² to 2200 g/m²

up to 1150°C CONTACT HEAT!

0736

Art. No.	Weight [g/m²]	Thickness [mm]	Remarks
JT900HT	approx. 1,000	1.4	E-glass fabric HT-coating - A2 - s1, d0 non-flammable
JT930HT	approx. 2,200	2.6	E-glass fabric HT-coating - A1 non-flammable

Additional qualities on request!

Silicate weave with vermiculite coating

- Flexible, soft
- Can be permanently loaded up to 1,100°C, briefly up to 1,300°C
- Standard width 0.9 m
- Weights from 630 g/m² to 1250 g/m²

up to 1300°C CONTACT HEAT!

Art. No.	Weight [g/m²]	Thickness [mm]	Remarks
JT1250HT	approx. 630	0.7	Silicate weave with vermiculite coating - A1 non-flammable
JT1200HT	approx. 1,250	1.4	Silicate weave with vermiculite coating - A1 non-flammable

Additional qualities on request!

Splash protection blankets.

The most important measure for preventing incipient fires during welding or grinding work is covering of flammable areas with a classified splash protection blanket from JUTEC®. Special coatings in combination with the fabric weave and the density create a broad range of mechanical loads and offer you maximum protection up to 1,300°C.

Splash protection blanket with Alufix coating

- flame retardant: B - s2, d0 according to DIN EN 13501-1
- Protection against flying sparks and grinding splashes
- Can be permanently loaded up to 550°C, briefly up to 600°C

Art. No.	Dimensions [mm]	Weight [g/m²]	Thickness [mm]	Remarks
S1351020	1,000 x 2,000	approx. 650	0.7	slip-resistant, gray on one side
S1352020	2,000 x 2,000	approx. 650	0.7	slip-resistant, gray on one side
S1352030	2,000 x 3,000	approx. 650	0.7	slip-resistant, gray on one side

Additional dimensions on request!

Splash protection blanket with HT coating

- non-flammable: A2 - s1, d0 according to DIN EN 13501-1
- Protection against welding splatter
- Can be permanently loaded up to 750°C, briefly up to 850°C

Art. No.	Dimensions [mm]	Weight [g/m²]	Thickness [mm]	Remarks
S2351020	1,000 x 2,000	approx. 1,070	1.4	mechanically loadable, abrasion-resistant
S2352020	2,000 x 2,000	approx. 1,070	1.4	mechanically loadable, abrasion-resistant
S2352030	2,000 x 3,000	approx. 1,070	1.4	mechanically loadable, abrasion-resistant

Additional dimensions on request!

Splash protection blanket with HT coating

- non-flammable: A2 - s1, d0 according to DIN EN 13501-1
- Protection against red-hot welding spatter
- Can be permanently loaded up to 900°C, briefly up to 1150°C

Art. No.	Dimensions [mm]	Weight [g/m²]	Thickness [mm]	Remarks
S4351020	1,000 x 2,000	approx. 1,000	1.6	mechanically loadable, abrasion-resistant
S4352020	2,000 x 2,000	approx. 1,000	1.6	mechanically loadable, abrasion-resistant
S4352030	2,000 x 3,000	approx. 1,000	1.6	mechanically loadable, abrasion-resistant

Additional dimensions on request!

Splash protection blanket with vermiculite coating

- non-flammable: A1 according to DIN EN 13501-1
- Protection against bright red-hot welding splatter and slag
- Can be permanently loaded up to 1100°C, briefly up to 1300°C

Art. No.	Dimensions [mm]	Weight [g/m²]	Thickness [mm]	Remarks
S5350920	900 x 2,000	approx. 1,250	1.4	flexible, slip-resistant
S5351820	1,800 x 2,000	approx. 1,250	1.4	flexible, slip-resistant
S5351830	1,800 x 3,000	approx. 1,250	1.4	flexible, slip-resistant

Additional dimensions on request!

JUTEC® curtains are produced in any width and length, including in the form of slats and without visible strips.

Hanging/extension is achieved on all sides with hooks, eyelets, loops, rings, Velcro fasteners and snaps.

Contact heat.

Welder's curtain with viewing window

- With louver window (500 mm)
- With one-sided eyelet device (extra charge for eyelets and rings)

Art. No.	Dimensions [mm]	Contact heat [°C]	Remarks
SV1015A [ÖR1]	1,000 x 1,500	200	A = cotton canvas (olive) + PVC
SV1015B [ÖR1]	1,000 x 1,500	600	B = JT650G1 + PVC
SV1015C [ÖR1]	1,000 x 1,500	850	C = JT600HT + PVC
SV1015D [ÖR1]	1,000 x 1,500	1,150	D = JT900HT + PVC
SV0915E [ÖR1]	900 x 1,500	1,300	E = JT1200HT + PVC

Delivery WITHOUT frame!!

Mobile frame for protective curtains

Art. No.	Dimensions [mm]	Material	Remarks
TW-Z-TW-2000	1,950 x 2,070	Steel	Frame[1-piece]
TW-Z-TW-4000	4,050 x 2,070	Steel	Frame with 2 swiveling arms[3-piece]

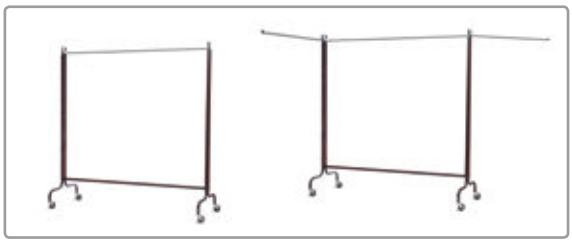

Fabric curtains

- With one-sided eyelet device (extra charge for eyelets and rings)

Art. No.	Dimensions [mm]	Contact heat [°C]	Remarks
SV1010BW [ÖR1]	1,000 x 1,000	200	Cotton canvas, approx. 420 g/m²
SV1010G1 [ÖR1]	1,000 x 1,000	600	JT650G1, approx. 650 g/m²
SV1010CS [ÖR1]	1,000 x 1,000	850	JT600HT, approx. 1,070 g/m²
SV1010WS [ÖR1]	1,000 x 1,000	1150	JT900HT, approx. 1,000 g/m²
SV0910SI [ÖR1]	900 x 1,000	1,300	JT1200HT, approx. 1,250 g/m²

Radiated heat.

Fabric curtains for radiation protection

- With one-sided eyelet device (extra charge for eyelets and rings)

Art. No.	Dimensions [mm]	Radiated heat [°C]	Remarks
SV1010KA-3 [ÖR1]	1,000 x 1,000	1,000	Aramide fabric with aluminum coating on one side
SV1010KA-4 [ÖR1]	1,000 x 1,000	1,000	E-glass fabric with aluminum coating on one side

Additional qualities and dimensions on request!

Fasteners

Art. No.	Dia. [mm]	Material	Remarks
SVÖ00017	16	Brass	Eyelet
SVR00040	40	Steel	Ring

Eyelets and rings on several sides on request! Also see dimension sheet on Page 18.

Foundry mats.

JUTEC® insulating mats are used for slow cooling of preheated cast parts and to reduce energy losses.

Mats with non-woven material filling

Art. No.	Dimensions [mm]	Heat protection [°C]	Remarks
G1201010	1,000 x 1,000 x 45	1,000	Insulating mat, mechanically loadable
TG101010	1,000 x 1,000 x 20	500	Insulating mat, slip-resistant

Additional dimensions on request!

• *(G1201010)*

• *(TG101010)*

Weld seam cover mat.

JUTEC® weld seam covers for protection of weld seams against moisture and for rapid cooling. Fasteners alternatively with leather buckles, Velcro fasteners and eyelets.

Pipe construction mats

Glass fabric with aluminum plate film with buckle

Art. No.	Dimensions [mm]	Heat protection [°C]
RM0203PL-AL	200 mm pipe = L 800, W 300	500
RM0303PL-AL	300 mm pipe = L 1,100, W 300	500
RM0403PL-AL	400 mm pipe = L 1,400, W 300	500
RM0503PL-AL	500 mm pipe = L 1,800, W 300	500
RM0603PL-AL	600 mm pipe = L 2,100, W 300	500
RM0703PL-AL	700 mm pipe = L 2,400, W 300	500
RM0803PL-AL	800 mm pipe = L 2,700, W 300	500
RM0903PL-AL	900 mm pipe = L 3,000, W 300	500
RM1003PL-AL	1,000 mm pipe = L 3,400, W 300	500
RM1103PL-AL	1,100 mm pipe = L 3,700, W 300	500
RM1203PL-AL	1,200 mm pipe = L 4,050, W 300	500
RM1303PL-AL	1,300 mm pipe = L 4,300, W 300	500
RM1403PL-AL	1,400 mm pipe = L 4,700, W 300	500
RM0205PL-AL	200 mm pipe = L 800, W 500	500
RM0305PL-AL	300 mm pipe = L 1,100, W 500	500
RM0405PL-AL	400 mm pipe = L 1,400, W 500	500
RM0505PL-AL	500 mm pipe = L 1,800, W 500	500
RM0605PL-AL	600 mm pipe = L 2,100, W 500	500
RM0705PL-AL	700 mm pipe = L 2,400, W 500	500
RM0805PL-AL	800 mm pipe = L 2,700, W 500	500
RM0905PL-AL	900 mm pipe = L 3,000, W 500	500
RM1005PL-AL	1,000 mm pipe = L 3,400, W 500	500
RM1105PL-AL	1,100 mm pipe = L 3,700, W 500	500
RM1205PL-AL	1,200 mm pipe = L 4,050, W 500	500
RM1305PL-AL	1,300 mm pipe = L 4,300, W 500	500
RM1405PL-AL	1,400 mm pipe = L 4,700, W 500	500

Additional closure systems on request!

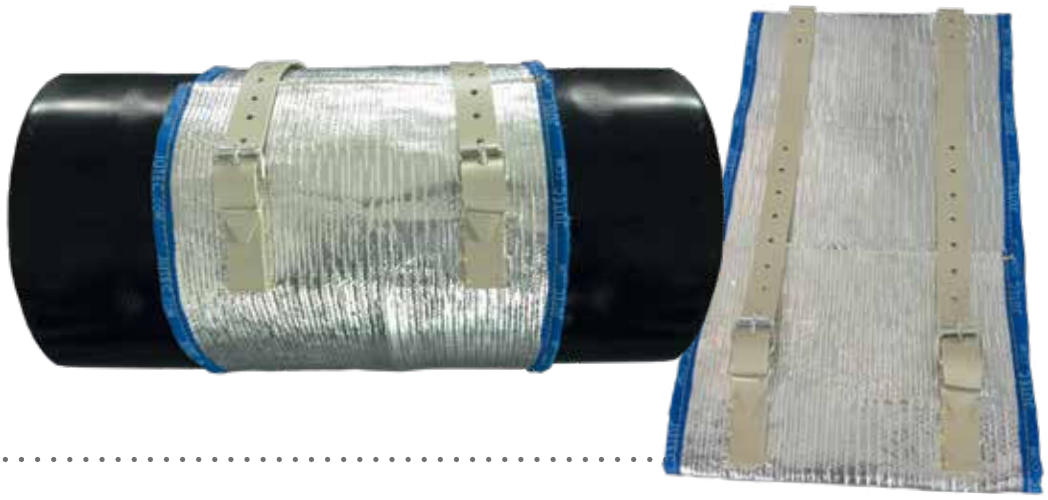

up to 500°C CONTACT HEAT!

JUTEC® protective covers protect against damage during welding and grinding work. Time-consuming dismantling of attached parts on the vehicle is eliminated. The protective covers are reusable, non-flammable and silicone-free.

Window protection blanket

- *for windshields*

Art. No.	Dimensions [mm]	Heat protection [°C]	Remarks
SS1351020	1,000 x 2,000	600	JT650G1, approx. 650 g/m²
SS1351030	1,000 x 3,000	600	JT650G1, approx. 650 g/m²
SS1352020	2,000 x 2,000	600	JT650G1, approx. 650 g/m²
SS5350920	900 x 2,000	1,300	JT1200HT, approx. 1,250 g/m²
SS5350930	900 x 3,000	1,300	JT1200HT, approx. 1,250 g/m²
SS5351830	1,800 x 3,000	1,300	JT1200HT, approx. 1,250 g/m²

Additional dimensions on request!

Door protection blanket

- *For standard models, e.g. AUDI, VW, BMW, Mercedes Benz, Toyota and universal for trucks*

Art. No.	Dimensions [mm]	Heat protection [°C]	Remarks
TS135	Standard	600	JT650G1, approx. 650 g/m²
TS135LKW	Standard	600	JT650G1, approx. 650 g/m²
TS535	Standard	1,300	JT1200HT, approx. 1,250 g/m²
TS535LKW	Standard	1,300	JT1200HT, approx. 1,250 g/m²

Interior protection blanket

- *with one-sided magnetic fasteners*

Art. No.	Dimensions [mm]	Heat protection [°C]	Remarks
IRS135	on request	600	Interior protection blanket from JT650G1

Please provide dimensions!

Wheel cover

Art. No.	Dia. [mm]	Heat protection [°C]	Remarks
RADS135PKW	650	600	Wheel cover for passenger cars with elastic band from JT650G1
RADS135LKW	1,100	600	Wheel cover for trucks with elastic band from JT650G1

Tailgate protection

Art. No.	Dimensions [mm]	Heat protection [°C]	Remarks
HKS135XL	Standard	600	Tailgate protection for passenger cars with Velcro fastener from JT650G1
HKS535XL	Standard	1,300	Tailgate protection for passenger cars with Velcro fastener from JT1200HT

Welder's pillows.

JUTEC® welder's pillows are used as heat protection when kneeling or sitting on a hot surface. Ideal for tank construction and welding on hot metals. They also offer maximum comfort. In addition, they prevent wear and pain in knee joints. The outer cover consists of non-flammable, mechanically loadable materials.

Art. No.	Dimensions [mm]	Heat protection [°C]	Remarks
SK4040BW	400 x 400 x 40	200	Outer cover from JT550BW cotton canvas
SK4040G1	400 x 400 x 40	500	Outer cover from JT650G1
SK4040LD	400 x 400 x 40	250	Outer cover of split leather
SK4040GS	400 x 400 x 40	250	Outer cover from JT650GS1 (moisture-proof)
SK4040CS	400 x 400 x 40	850	Outer cover from JT600HT
SK4040SI	400 x 400 x 40	1,200	Outer cover from JT1200HT
SK4545GM	450 x 450 x 60	500	Outer cover from JT650G1
SK10040G1	1,000 x 400 x 40	500	Outer cover from JT650G1 (not illustrated)

Additional dimensions on request!

- (SK4040BW)

- (SK4040G1)

- (SK4040LD)

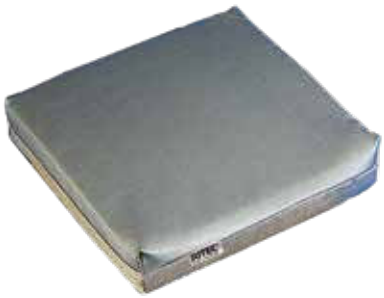

- (SK4040GS)

- (SK4040SI)

- (SK4040CS)

- (SK4545GM)

Flame protection mats with insulation protection.

JUTEC® welding mats are used as a supporting surface during welding and soldering work to protect the surrounding area and to prevent complicated dismantling work.

The mats must be checked for damage before every use.

Dry mat as soldering pad

- *Up to 700°C on both sides and can be reused several times*

Art. No.	Dimensions [mm]	Heat protection [°C]	Remarks
T0100305	330 x 500 x 5	700	Soldering pad with aluminum reinforcement
T0200305	330 x 500 x 5	700	Soldering pad without aluminum reinforcement

Additional dimensions on request!

Without aluminum
(T0200305)

With aluminum
(T0100305)

Dry mat as welding pad

- *Can be used for up to 1,000°C briefly on black side*
- *Can be reused several times*
- *Special multi-layer structure*

Art. No.	Dimensions [mm]	Heat protection [°C]	Remarks
T1200303	300 x 300 x 20	1,000	Welding pad with insulation
T1200305	300 x 500 x 20	1,000	Welding pad with insulation
T1200505	500 x 500 x 20	1,000	Welding pad with insulation
T1200510	500 x 1000 x 20	1,000	Welding pad with insulation
T1201010	1,000 x 1,000 x 20	1,000	Welding pad with insulation

Additional dimensions on request!

Wet mat

- *Can e used up to 3,000°C briefly on black side*
- *Protection against liquid welding spatter and direct welding flame*
- *Special multi-layer structure, wet on one side*
- *Reusable by re-wetting (instructions included)*

Art. No.	Dimensions [mm]	Heat protection [°C]	Remarks
F4200303	300 x 300 x 30	3,000	Wet mat with special insulation
F4200305	300 x 500 x 30	3,000	Wet mat with special insulation
F4200505	500 x 500 x 30	3,000	Wet mat with special insulation
F4200510	500 x 1000 x 30	3,000	Wet mat with special insulation
F4201010	1,000 x 1,000 x 30	3,000	Wet mat with special insulation

Additional dimensions on request!

The JUTEC® field of activities in the heat protection sector is so diverse that it is only possible to achieve maximum safety together with our customers. The following product groups are intended to provide a sense of what is currently being used. Allow yourself to be inspired and utilize our expertise.

JUTEC-3000 flame protection paste

- Can be applied by hand
- Can be modeled.
- Heat protection up to approx. 3,000°C, asbestos-free, ceramic-free
- No further flow of heat in material
- Expensive, time-consuming dismantling is eliminated
- Energy supplied is concentrated on application area
- No paint fire, no material deformations
- Also protects rubber, PVC and hydraulic hoses

Art. No.	Container [kg]	Heat protection [°C]	Remarks
J2101000	1	3,000	JUTEC-3000 flame protection paste

Heat protection safety case

Contains everything necessary for difficult soldering and/or welding work to reliably prevent damage due to the effects of heat. Clearly laid out and conveniently close together. Prevents insurance damage and guarantees clean, fast work.
Belongs in every assembly cart, ideal for maintenance work.

Art. No.	Dimensions [mm]	Heat protection [°C]	Remarks
K1501000	900 x 2000	1,300	1 x splash protection blanket
	300 x 500 x 20	1,000	1 x dry mat
	300 x 300 x 30	3,000	1 x wet mat
	1 kg	3,000	1 x JUTEC-3000 flame protection 3000

Individual combinations on request!

(K1501000)

EN 1869: 1997

Extinguishing blankets

- Made of textured E-glass fabric
- Cut edges seamed, with grip pockets
- Packed folded in red carrying bag marked with "Extinguishing blanket"
- **Not suitable for outdoor use!**

Art. No.	Dimensions [mm]	Remarks
JT5020FL	1,800 x 1,600	textured extinguishing blanket (standard)
JT5000LB	200 w x 300 h x 240 d	Extinguishing blanket container for wall-mounting, · can be folded forward

(JT5020FL)

(JT5000LB)

RED welder's glove

- *Sewn with Kevlar® thread*
- *Insulated split leather*
- *Length: 35 cm*
- *Material: Split leather*

Art. No.	Length [mm]	Remarks
H05L0035-SC	350	5-finger glove made of split leather

EN 388:2016	EN 407:2004	DIN EN 12477:2005
4144B	4 2 2 X 4 X	Typ A

Welder's glove made of cowhide | aluminized

- *Abrasion-resistant*
- *Simple cotton lining*
- *Length: 35 cm*
- *Material: Cowhide*

Art. No.	Length [mm]	Remarks
H05LA235-BL	350	5-finger glove made of cowhide

EN 388:2016	EN 407:2004	DIN EN 12477:2005
4222X	4 2 3 4 4 4	Typ A

Fabric protection made of aramide fabric | aluminized

- *Heat-reflecting*
- *With rubber bands*
- *Additional protection of standard gloves*
- *Increased service life of basic glove, therefore reduces costs, economical*
- *Can be used on both sides*
- *Length: approx. 22 cm*
- *Material: Aramide fabric | aluminized*

CE

NO PPE!

Art. No.	Remarks
HSHD002KA-3	Fabric protection

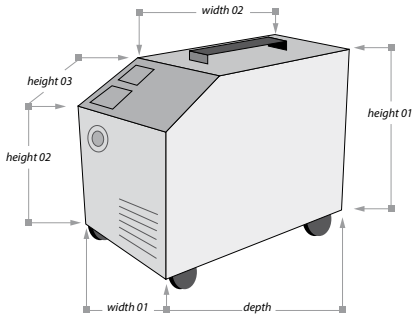

Also see Page 19!

Full equipment protection

- Protects against welding spatter and flying sparks
- Crystal clear slat ensures access to displays and controls
- Ideal for rental devices, demonstration or test systems
- A protective hose for hose packages can also be mounted.
- Dimensions: depending on equipment type
- Material: JT650G1

Art. No.	Remarks
SH equipment type G1	Full equipment protection of G1

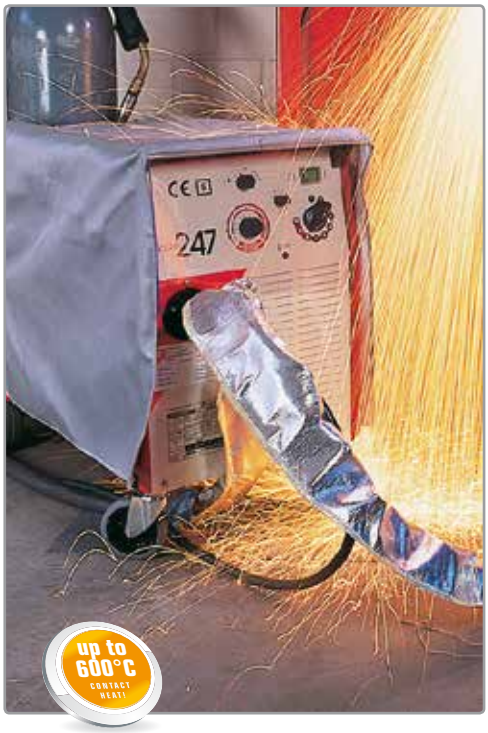

Insulating hose

- Protects against welding spatter and flying sparks
- Heat protection up to approx. 600°C
- Dimensions: depending on hose package
- Diameter from 30 to 120 mm
- Material: Aramide fabric | aluminized

Art. No.	Dia. [mm]	Remarks
ISL030KAN-KL	30	Insulating hose

Other diameters on request!

Welding gun protection made of aramide fabric | aluminized

- Abrasion-resistant
- Excellent handling
- Fits on standard welding guns
- Standard dimensions
- Material: Aramide fabric | aluminized

up to 1000°C RADIATION HEAT!

Art. No.	Remarks
SPH001KAN	Welding gun protection

Welder's protective apron made of full grain leather

- Protects against flying sparks, grinding and sanding spatter
- Very pleasant wearing comfort
- With tie belt and neck strap
- Material: smooth full grain leather, 2.5 mm thick

Art. No.	Dimensions [mm]	Remarks
HSS1008VL-2	1,000 x 800	Welder's apron made of full grain leather

Only to be worn in conjunction with PSA according to EN 11611 or EN 11612!

Dimension sheet for curtains.

Use our dimension sheets for fast ordering. Simply copy, fill out and fax.

- *Width ..... mm Height ..... mm*
- *Ö1 - Eyelets on one side Ö2 - Eyelets on two side*
  Ö3 - Eyelets on three side Ö4 - Eyelets on four side
  [Standard distance is 30 cm for eyelets, rings, snaps and tabs]
- *different distance between the eyelets: ..... mm*

☐ Ö1	☐ Ö2	☐ Ö3	☐ Ö4
☐ A	☐ A	☐ A	☐ A
☐ B	☐ B	☐ B	☐ B
☐ C	☐ C	☐ C	☐ C
☐ D	☐ D	☐ D	☐ D

- ☐ *Rings Number of rings: .....*
- *Other: [Please draw in!]*
  ☐ *Snap* ☐ *continuous loop*

  ☐ *Velcro closure* ☐ *individual tabs*

- *Material:*

  ☐ *BW Cotton*
  [not suitable for outdoor] ☐ *JT 650 G1*

  ☐ *JT 600 HT* ☐ *JT 900 HT*

  ☐ *JT 1200 HT* ☐ *others .....*

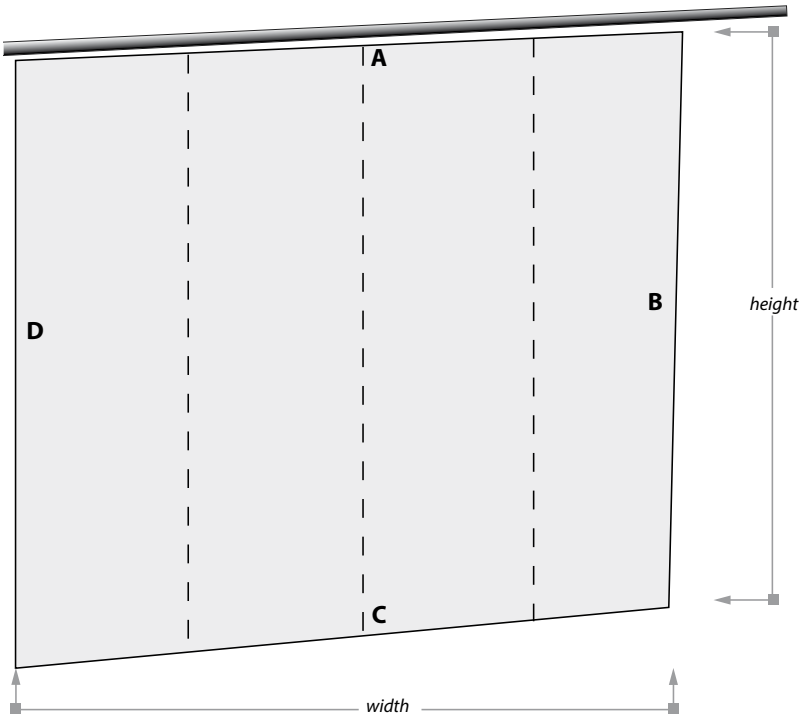

Dimension sheet for equipment covers.

- Manufacturer .....
- Model .....
- Width 01 ..... mm
- Width 02 ..... mm
- Height 01 ..... mm
- Height 02 ..... mm
- Height 03 ..... mm
- Depth ..... mm

Position of ventilation .....

Position of grip .....

Dimensions of electrical connection .....

Dimensions of hose set .....

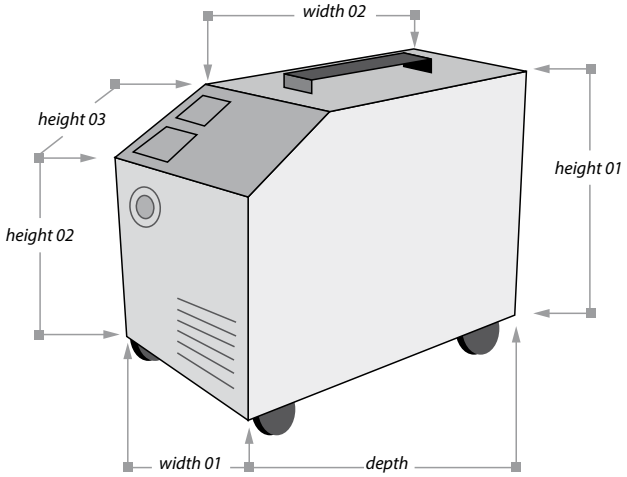

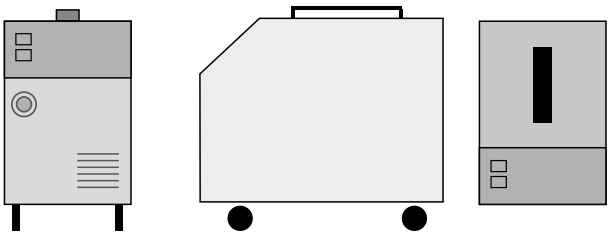

Our catalogs.

Work Protection

Heat Protection

Insulation Technology

Laser Protection

GB - © 2019_07_12_JUTEC® GmbH • We reserve the rights for technical changes, no liability for print mistakes! Subject to tolerances!

JUTEC Hitzeschutz und Isoliertechnik GmbH
Am Autobahnkreuz 6 - 8 | DE-26180 Rastede
Tel.: +49 (0) 4402 - 86 32 - 0 | Fax: +49 (0) 4402 - 86 32 - 499
info@jutec.com | www.jutec.com